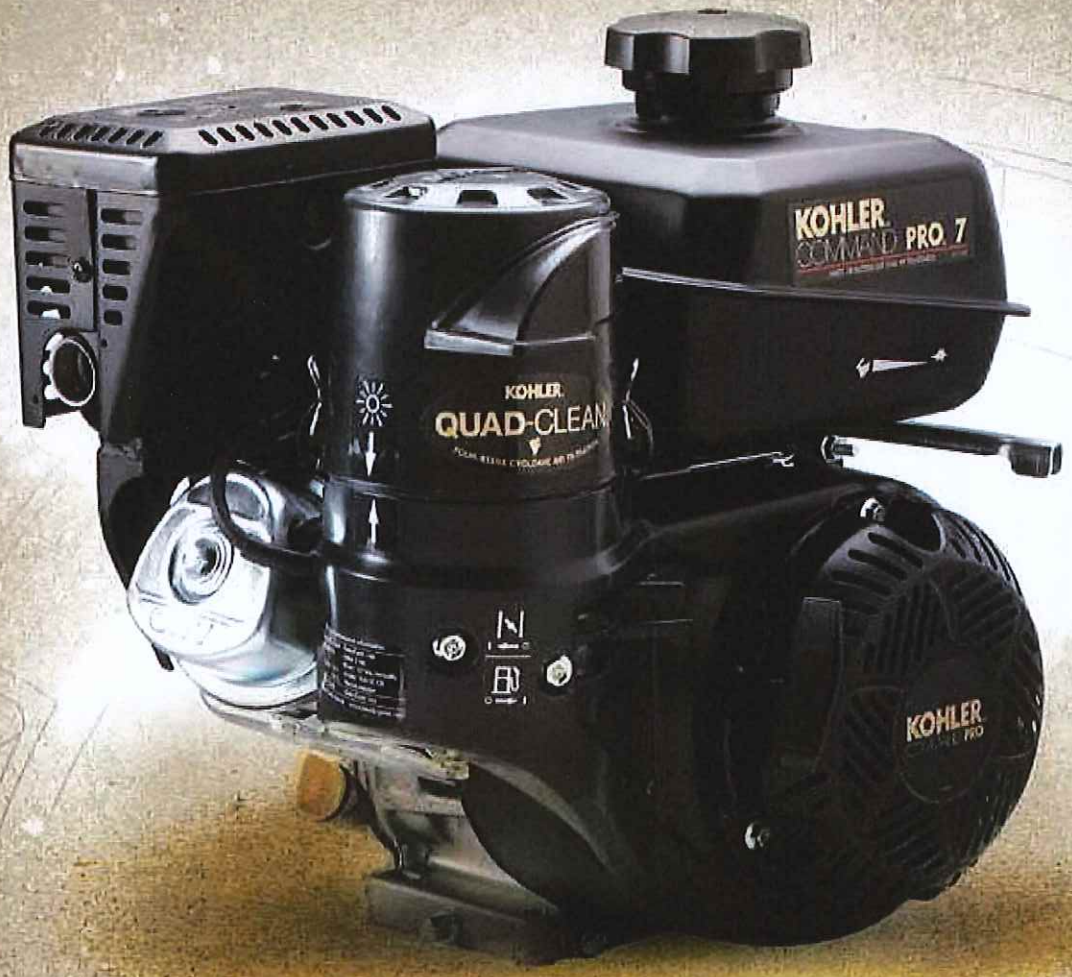

KOHLER®
COMMAND PRO® 7-14 HP

KOHLER. Engines

BUILT TO FINISH EVERY JOB IT STARTS.

This is what it takes to be a PRO. Performance-enhancing features like a heavy-duty air cleaner, forged-steel crankshaft, electronic ignition and cast-iron cylinder liner. KOHLER® Command PRO® is the standard for professional-grade power and performance.

KOHLER Command PRO.

DEPENDABLE OPERATION

- Quad-Clean™ all-season four-stage cyclonic air filter – effective engine protection for tough-and-dirty conditions.
- Protects from airborne contaminants that can easily clog traditional air filters.

LONGER RUN TIMES

- Large-capacity fuel tank means more time working, less time filling.
- Electronic ignition and an advanced combustion system design help reduce fuel consumption.

EASIER REPOWERING

- Power or repower your equipment without expensive modifications.

ALL-WEATHER PERFORMANCE

- Quad-Clean air filter reconfigures in seconds to recycle engine heat.
- Command PRO starts effortlessly in all weather conditions, from 0 to 110 degrees.

BUILT TO LAST

- Forged-steel crankshafts and tough Stellite®-faced exhaust valves with Tufftride®-coated stems and cast-iron cylinder bores.
- Oil Sentry™ automatically shuts engine down in low-oil conditions.

KOHLER® COMMAND PRO® 7-14 HP

ENGINE ARCHITECTURE

TOP VIEW ▶

PTO VIEW ▶

7-HP HORIZONTAL-SHAFT ENGINES

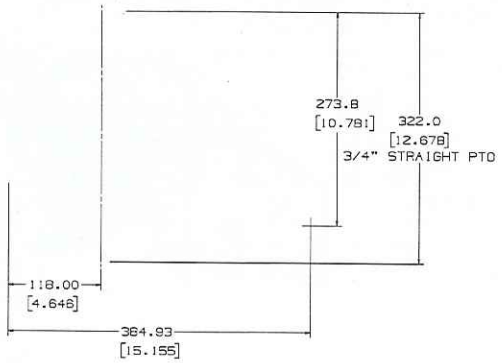

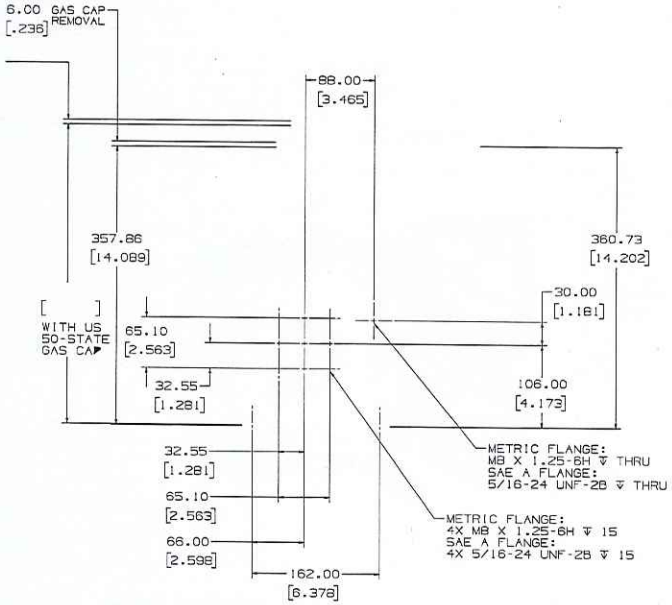

7-HP HORIZONTAL-SHAFT ENGINES

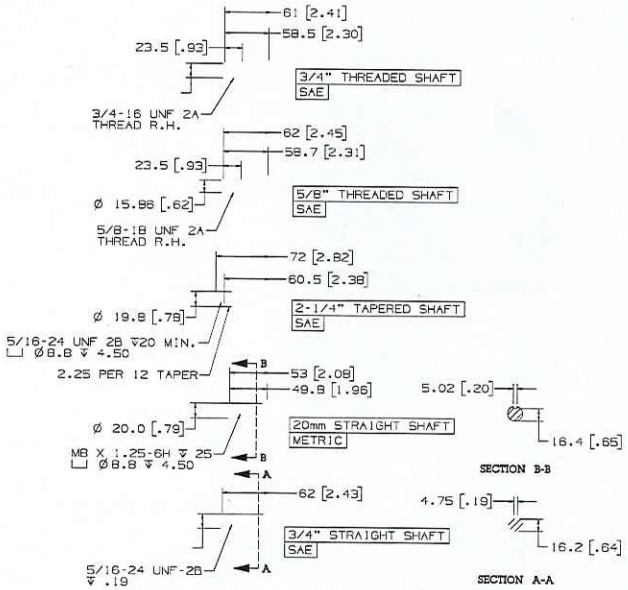

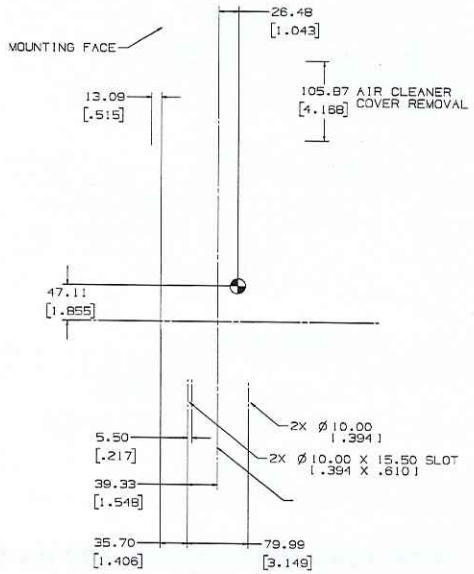

SHAFT VARIATIONS ▶

VALVE COVER VIEW ▶

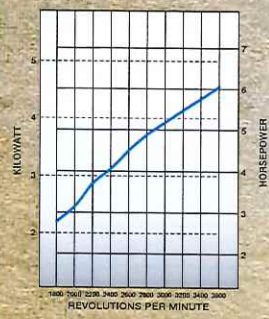

Net Power

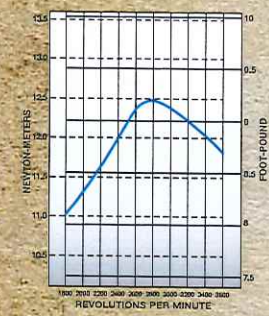

Net Torque

TESTED PER SAE J1995.
MEETS SAE J1940 RATING STANDARD.

KOHLER® COMMAND PRO® 7-14 HP ENGINE ARCHITECTURE

TOP VIEW ▶

PTO VIEW ▶

9.5-HP HORIZONTAL-SHAFT ENGINES

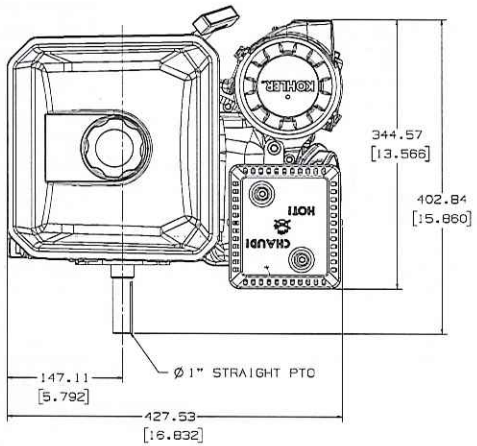

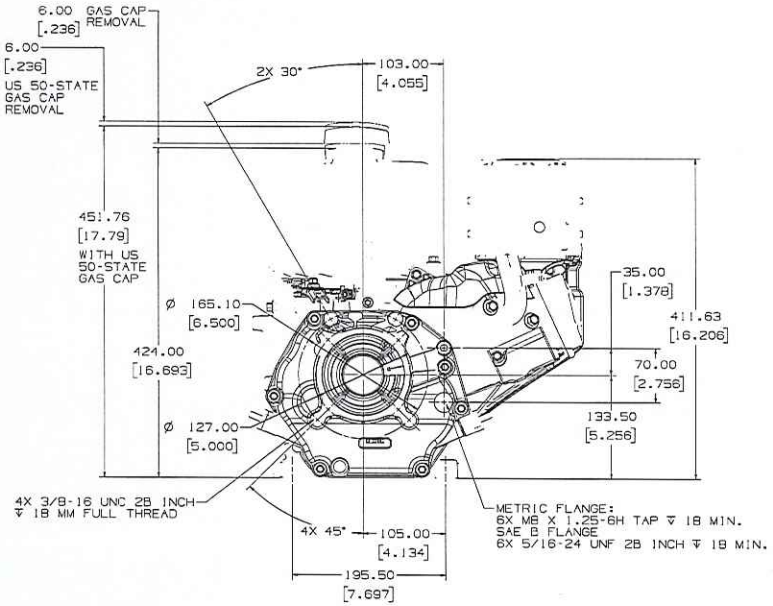

9.5-HP HORIZONTAL-SHAFT ENGINES

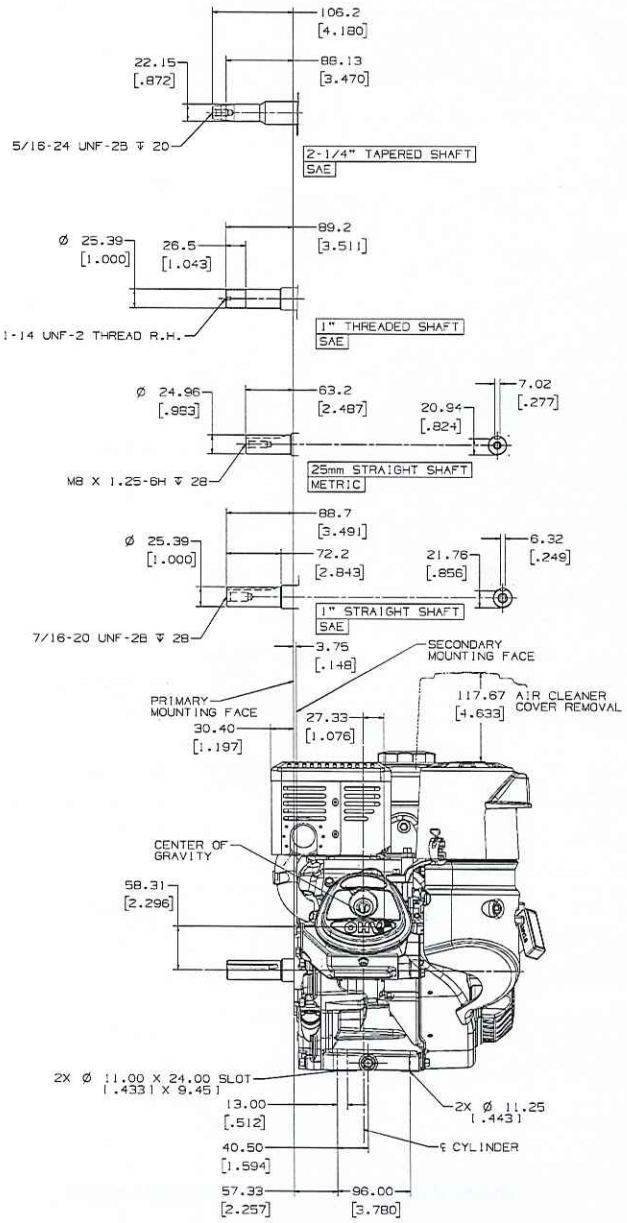

SHAFT VARIATIONS ◀

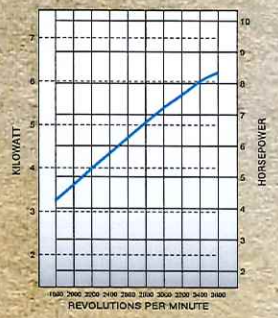

Net Power

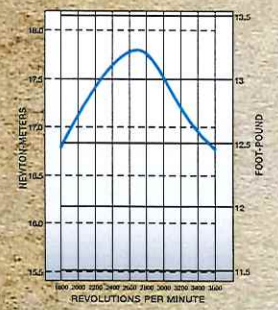

Net Torque

VALVE COVER VIEW ◀

TESTED PER SAE J1995.
MEETS SAE J1940 RATING STANDARD.

KOHLER® COMMAND PRO® 7-14 HP

ENGINE ARCHITECTURE

TOP VIEW ▶

PTO VIEW ▶

14-HP HORIZONTAL-SHAFT ENGINES

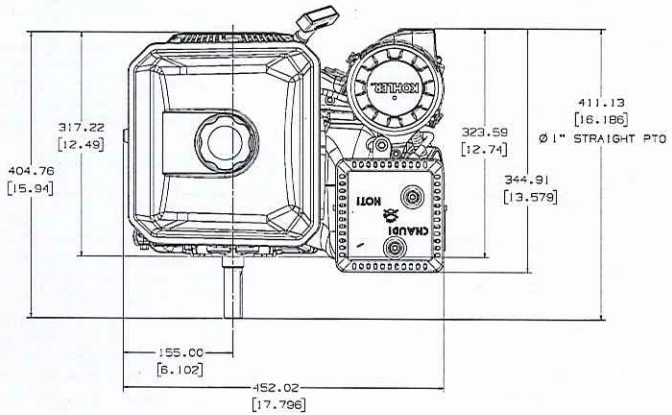

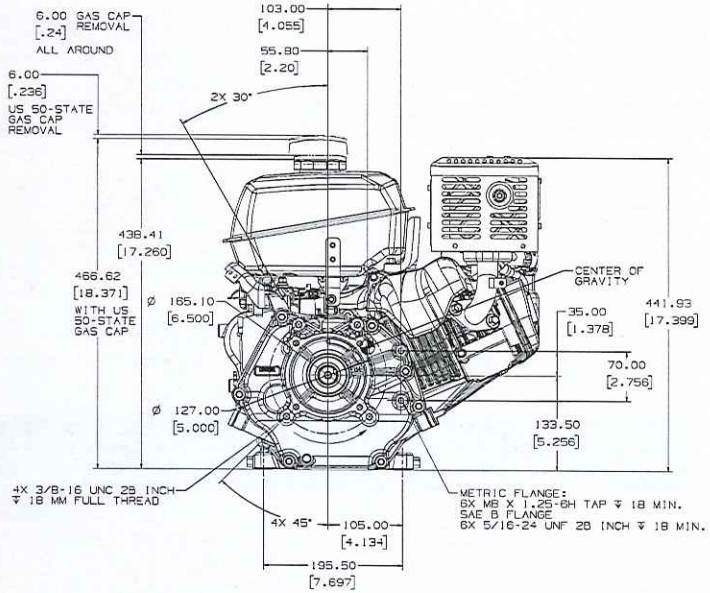

14-HP HORIZONTAL-SHAFT ENGINES

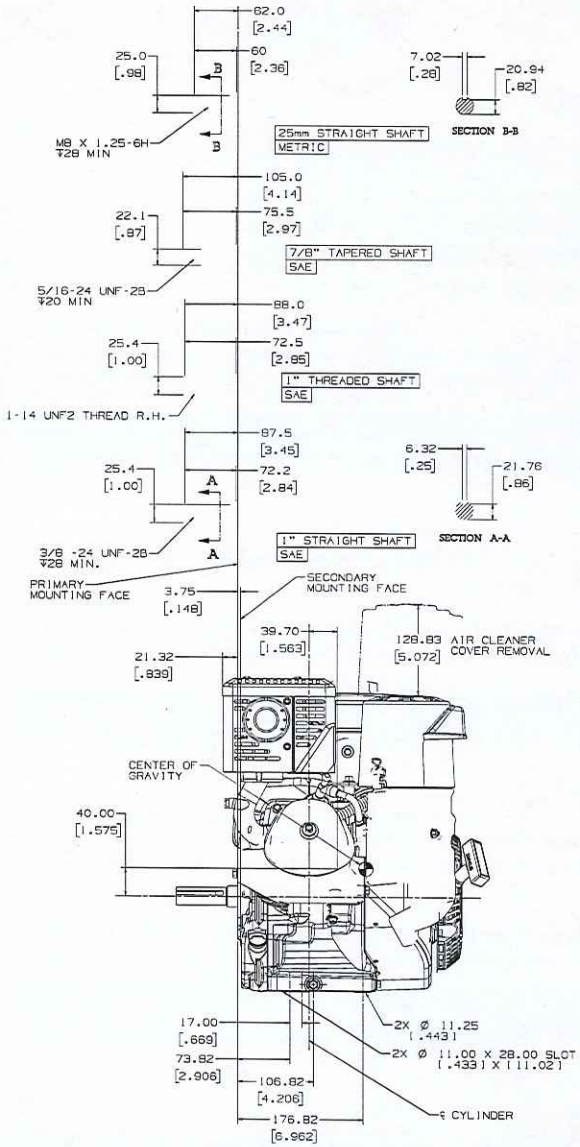

SHAFT VARIATIONS ▶

VALVE COVER VIEW ▶

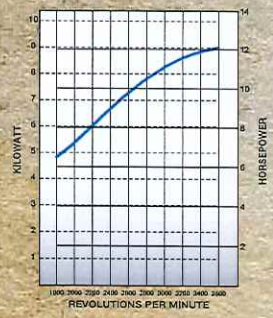

Net Power

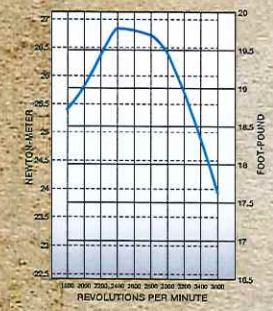

Net Torque

TESTED PER SAE J1995.
MEETS SAE J1940 RATING STANDARD.

KOHLER Command PRO.

Engine Type		Four-cycle, single cylinder, overhead valve, air-cooled, gasoline, horizontal shaft, aluminum head and crankcase with cast iron cylinder liner.		
Model:		CH270	CH395	CH440
*Gross Power @ 3600 rpm	Max. hp (kW)	7 (5.2)	9.5 (7.1)	14 (10.5)
*Net Power @ 3600 rpm	Max. hp (kW)	6 (4.5)	8.5 (6.4)	12.1 (9.0)
Displacement	cu in (cc)	12.7 (208)	16.9 (277)	24.7 (429)
Bore	in (mm)	2.8 (70)	3.1 (78)	3.5 (89)
Stroke	in (mm)	2.1 (54)	2.3 (58)	2.7 (69)
Peak Torque @ rpm	ft lb (Nm)	9.2 (12.4) @ 2800 rpm	13.2 (17.8) @ 2600 rpm	19.8 (26.8) @ 2400 rpm
Compression Ratio		8.5:1	8.5:1	8:1
Dry Weight (recoil start)	lb (kg)	38.7 (17.5)	61.5 (27.9)	72.8 (33.0)
Oil Capacity	U.S. qt (L)	0.6 (0.6)	1.4 (1.3)	
Fuel Capacity	U.S. qt (L)	4.2 (4.0)	7.4 (7.0)	
Lubrication		Splash		
**Dimensions L x W x H	in (mm)	12.7 x 15.2 x 14.2 (323 x 385 x 361)	15.9 x 16.8 x 16.2 (403 x 428 x 424)	16.2 x 17.8 x 17.4 (411 x 452 x 442)
Crankshaft Height	in (mm)	4.2 (106.0)	5.3 (133.5)	

*Horsepower ratings exceed Society of Automotive Engineers Small Engine Test Code J1940. Actual engine horsepower is lower and affected by, but not limited to, accessories (air cleaner, exhaust, charging, cooling, fuel pump, etc.), application, engine speed and ambient operating conditions (temperature, humidity and altitude). For more information, contact Kohler Co. Engine Engineering. Kohler reserves the right to change product specifications, designs and equipment without notice and without incurring obligations.
** Engine measurements based on a base engine without electric start.

Standard Features

- Quad-Clean™ heavy-duty cyclonic air cleaner
- Built-in warm-air system for winter operation
- OHV slant cylinder
- Cast iron cylinder liner
- Large capacity metal fuel tank
- 3 fuel filters: fill neck, in-tank and carburetor inlet
- Electronic ignition
- Large capacity muffler with heat shield and spark arrestor
- CARB Tier III Certified
- Increased displacement
- Balance shaft (14 hp)
- Dual ball bearings
- Steel forged and hardened crankshaft
- Dual oil fills and drains
- Automatic low oil engine shutdown system
- Stellite®-faced exhaust valve
- Carbon canister fuel cap
- Water trap to separate moisture in fuel
- Swirl-induction combustion chamber
- Easy access throttle, choke and shutoff
- Automatic compression release
- Mechanical governor
- Sound-deadening alloy crankcase
- Carburetor bowl drain
- High inertial flywheel
- Silenced air intake
- Indexable easy pull recoil starter

Popular Factory Options

- 2:1 gear box
- 2:1 with clutch gear box
- 6:1 gear box
- High altitude kits
- 12-volt starter
- Exhaust deflector
- 3-, 10- or 18- (9.5 and 14 hp) amp charging
- Crankshaft/PTO variations
- No load idle solenoid for fuel economy
- Remote throttle
- Carburetor shut down solenoid
- Balance shaft 9.5 hp
- In-line fuel filter
- EEC and Canadian RFI Standards
- EU emissions and noise compliance
- EPA Phase III compliance
- Exhaust deflector
- Low profile air cleaner
- Low profile muffler
- Extended oil fill
- Remote throttle
- Remote choke

HERITAGE // KOHLER POWERS THE EARTH.

Nearly a century ago, the first KOHLER® engines worked sunup to sundown on American farms. Now they power hard-working equipment for construction, power washing, welding, lawn and landscape, and yes – agriculture.

From the world's first four-cycle, water-cooled gas engine in 1920 to the diesel engines we developed for the U.S. Navy in WWII to the industry's first electronic fuel-injected engine, we've built our reputation on high-quality engines that get the job done. Every time.

DURABILITY // BUILT FOR THE LONG HAUL.

We know the torture you put an engine through. Sixteen-hour days. Punishing weather. Monster inclines. So we make sure it lasts. Every engine is Kohler-engineered and extensively tested using stringent Kohler quality criteria.

You rely on us to make a living. We won't let you down.

PARTS & SERVICE // WE'VE GOT YOUR BACK.

We stand behind our dealers, and they stand behind our warranty. It's customer first, every time. Need a replacement part? It's in stock now, period. There are 13,000 dealers in our service network, so if yours doesn't have it, he'll get it in 48 hours or less.

KOHLER GENUINE PARTS
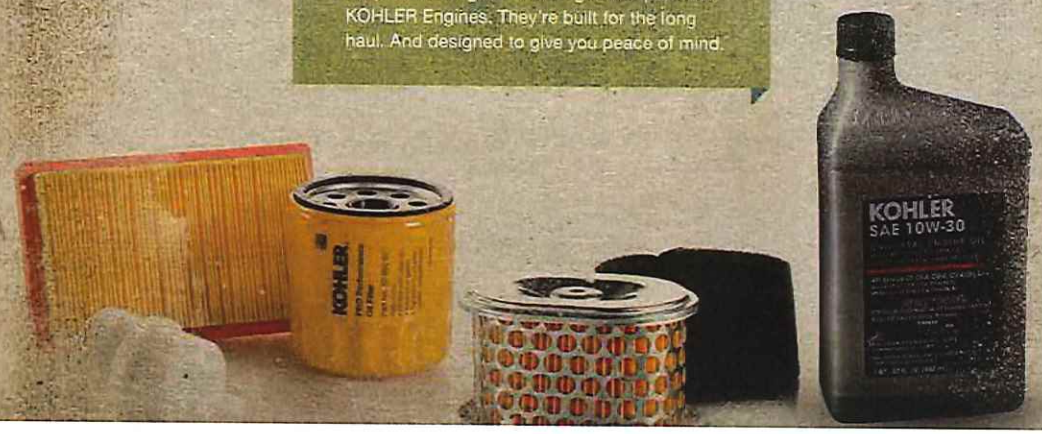
Only Kohler Engines makes genuine parts for KOHLER Engines. They're built for the long haul. And designed to give you peace of mind.